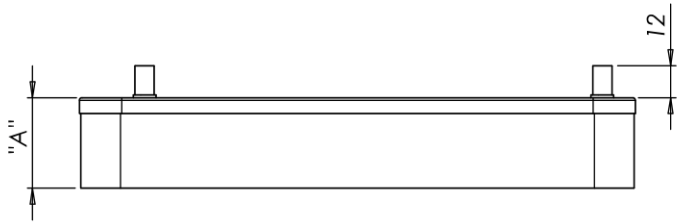

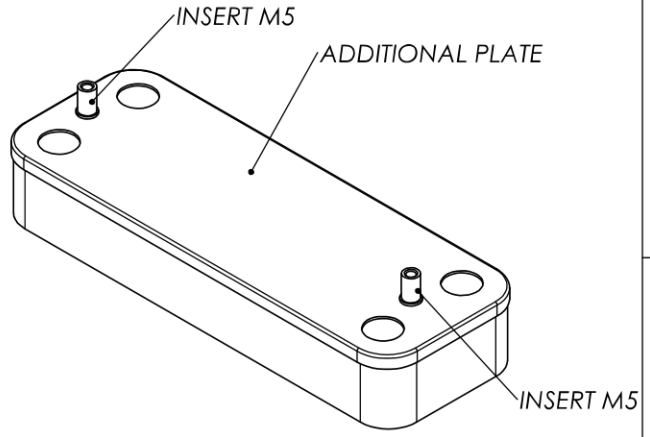

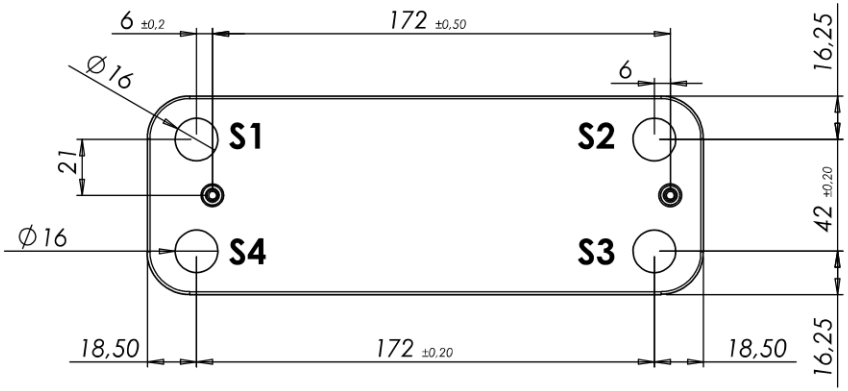

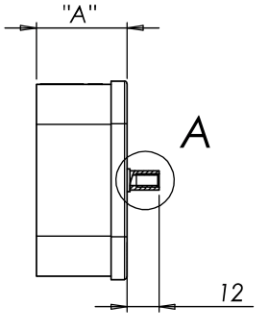

CEN3-14C-22	22	57
CEN3-14C-20	20	53
CEN3-14C-18	18	48
CEN3-14C-16	16	44
CEN3-14C-14	14	39
CEN3-14C-12	12	35
CEN3-14C-10	10	30
CODE	PLATE	"A"

"A" = 2.24x N.P. +7mm

S1-S2 PRIMARY SIDE
S3-S4 SECONARY SIDE

PLATE THICKNESS 0.30 AISI 304L

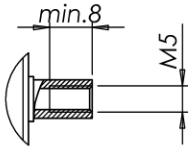

DETAIL A
SCALE 1 : 1

BRAZED PLATE HEAT EXCHANGER

CEN14C-018